P1/PX1

Original™ Series **METAL** Pumps

EOM
Engineering
Operation &
Maintenance

Simplify your process

LISTED
79

PRO-FLO®
PROGRESSIVE PUMP TECHNOLOGY

PRO-FLO X™
PROGRESSIVE PUMP TECHNOLOGY

WILDEN®
A DOVER COMPANY

WIL-10300-E-15
REPLACES WIL-10300-E-14

CAUTIONS—READ FIRST!

CAUTION: Do not apply compressed air to the exhaust port — pump will not function.

CAUTION: Do not over-lubricate air supply — excess lubrication will reduce pump performance. Pump is pre-lubed.

CAUTION: Do not under any circumstance loosen the set screw located at the adjuster dial of the Pro-Flo X™ pump. If the set screw is loose when the pump is pressurized, it could eject and cause injury to anyone in the area.

TEMPERATURE LIMITS:

Neoprene	–17.7°C to 93.3°C	0°F to 200°F
Buna-N	–12.2°C to 82.2°C	10°F to 180°F
EPDM	–51.1°C to 137.8°C	–60°F to 280°F
Viton®	–40°C to 176.7°C	–40°F to 350°F
Saniflex™	–28.9°C to 104.4°C	–20°F to 220°F
Polytetrafluoroethylene (PTFE)	4.4°C to 104.4°C	40°F to 220°F
Polyurethane	–12.2°C to 65.6°C	10°F to 150°F
Tetra-Flex™ PTFE w/Neoprene Backed	4.4°C to 107.2°C	40°F to 225°F
Tetra-Flex™ PTFE w/EPDM Backed	-10°C to 137°C	14°F to 280°F

NOTE: Not all materials are available for all models. Refer to Section 2 for material options for your pump.

NOTE: Canadian Standards Association (CSA) configured pumps should not be used in temperatures lower than 0.0°C to 51.6°C (32°F to 125°F).

NOTE: UL listed configured pumps have the following temperature limits:
UL 79 Buna- -12.2°C (10°F) to 52°C (125°F)

CAUTION: When choosing pump materials, be sure to check the temperature limits for all wetted components. Example: Viton® has a maximum limit of 176.7°C (350°F) but polypropylene has a maximum limit of only 79°C (175°F).

CAUTION: Maximum temperature limits are based upon mechanical stress only. Certain chemicals will significantly reduce maximum safe operating temperatures. Consult Chemical Resistance Guide (E4) for chemical compatibility and temperature limits.

WARNING: Prevention of static sparking — If static sparking occurs, fire or explosion could result. Pump, valves, and containers must be grounded to a proper grounding point when handling flammable fluids and whenever discharge of static electricity is a hazard.

CAUTION: Canadian Standards Association (CSA) configured pumps must be electrically grounded using the grounding location identified. Improper grounding can cause improper and dangerous operation.

CAUTION: Do not exceed 8.6 bar (125 psig) air supply pressure.

CAUTION: Canadian Standards Association (CSA) configured pumps should not exceed 6.9 bar (100 psig) sweet gas supply pressure.

CAUTION: For U.L. listed pumps, do not exceed 3.4 bar (50 psig) air supply pressure.

CAUTION: The process fluid and cleaning fluids must be chemically compatible with all wetted pump components. Consult Chemical Resistance Guide (E4).

CAUTION: Do not exceed 82°C (180°F) air inlet temperature for Pro-Flo X™ models.

CAUTION: Pumps should be thoroughly flushed before installing into process lines. FDA and USDA approved pumps should be cleaned and/or sanitized before being used.

CAUTION: Always wear safety glasses when operating pump. If diaphragm rupture occurs, material being pumped may be forced out air exhaust.

CAUTION: Before any maintenance or repair is attempted, the compressed air line to the pump should be disconnected and all air pressure allowed to bleed from pump. Disconnect all intake, discharge and air lines. Drain the pump by turning it upside down and allowing any fluid to flow into a suitable container.

CAUTION: Blow out air line for 10 to 20 seconds before attaching to pump to make sure all pipeline debris is clear. Use an in-line air filter. A 5μ (micron) air filter is recommended.

NOTE: When installing PTFE diaphragms, it is important to tighten outer pistons simultaneously (turning in opposite directions) to ensure tight fit. (See torque specifications in Section 7.)

NOTE: Cast Iron PTFE-fitted pumps come standard from the factory with expanded PTFE gaskets installed in the diaphragm bead of the liquid chamber. PTFE gaskets cannot be re-used. Consult PS-TG for installation instructions during reassembly.

NOTE: Before starting disassembly, mark a line from each liquid chamber to its corresponding air chamber. This line will assist in proper alignment during reassembly.

CAUTION: Pro-Flo® pumps cannot be used in submersible applications. Pro-Flo X™ is available in both submersible and non-submersible options. Do not use non-submersible Pro-Flo X™ models in submersible applications. Turbo-Flo® pumps can also be used in submersible applications.

CAUTION: Tighten all hardware prior to installation.

CAUTION: The gas outlet of CSA configured pumps must be vented to a safe location in accordance with local codes or, in the absence of local codes, an industry or nationally recognized code having jurisdiction over the specified installation.

CAUTION: For U.L. listed pumps, all pipe connections are to be made using U.L. classified gasoline-resistant pipe compound.

CAUTION: For U.L. listed pumps all installations must conform to NFPA 30, NFPA 30A, and all other applicable codes.

CAUTION: For U.L. listed pumps, air exhaust port is to be connected to pipe or tubing to be routed outdoors or other location determined to be equivalent.

CAUTION: For U.L. listed pumps, pump is to be grounded using the jam-nut located at the top of the long vertical carriage bolt. The ground connection is marked with a tag having the grounding symbol.

Grounding Symbol

PRO-FLO® PROGRESSIVE PUMP TECHNOLOGY

WILDEN A DOVER COMPANY

WILDEN PUMP DESIGNATION SYSTEM

P1/PX1 ORIGINAL™ METAL

13 mm (½") Pump
Maximum Flow Rate:
62.8 lpm (16.6 gpm)

LEGEND

xPX1 / XXXXX / XXX / XX / XXX / XXXX

- x — ATEX
- PX1 — MODEL
- XXXXX — WETTED PARTS & OUTER PISTON
- X — CENTER SECTION
- X — AIR VALVE
- XXX — DIAPHRAGMS
- XX — VALVE BALLS
- X — VALVE SEAT
- XX — O-RINGS
- XXXX — SPECIALTY CODE (if applicable)

MATERIAL CODES

MODEL
P1 = Pro-Flo®
PX1 = Pro-Flo X™
XPX1 = ATEX Pro-Flo X™

WETTED PARTS & OUTER PISTON
AA = ALUMINUM / ALUMINUM
AZ = ALUMINUM / NO PISTON
SS = STAINLESS STEEL / STAINLESS STEEL
SZ = STAINLESS STEEL / NO PISTON

CENTER SECTION
AA = ALUMINUM (PX1 only)
GG = CONDUCTIVE ACETAL (P1 only)
JJ = CONDUCTIVE POLYPROPYLENE (P1 only)
LL = ACETAL (P1 only)
PP = POLYPROPYLENE (P1 only)

AIR VALVE
A = ALUMINUM (PX1 only)
G = CONDUCTIVE ACETAL (P1 only)
J = CONDUCTIVE POLYPROPYLENE (P1 only)
L = ACETAL (P1 only)
P = POLYPROPYLENE (P1 only)

DIAPHRAGMS
XBS = CONDUCTIVE BUNA-N (Two Red Dots)
BNS = BUNA-N (Red Dot)
FSS = SANIFLEX™ [Hytrel® (Cream)]
PUS = POLYURETHANE (Clear)
TEU = PTFE w/EPDM BACK-UP (White)
THU = PTFE W/HIGH-TEMP BUNA-N BACK-UP (White)
TNU = PTFE W/NEOPRENE BACK-UP (White)
TNL = PTFE W/NEOPRENE BACK-UP O-RING, IPD (White)
VTS = VITON® (White Dot)
WFS = WIL-FLEX™ [Santoprene® (Orange Dot)]
EPS = EPDM (Blue Dot)

VALVE BALL
BN = BUNA-N (Red Dot)
FS = SANIFLEX™ [Hytrel® (Cream)]
PU = POLYURETHANE (Brown)
TF = PTFE (White)
VT = VITON® (White Dot)
WF = WIL-FLEX™ [Santoprene® (Orange Dot)]
EP = EPDM (Blue Dot)

VALVE SEAT
A = ALUMINUM
S = STAINLESS STEEL
V = VITON® (White Dot)

VALVE SEAT O-RING
BN = BUNA-N
FS = SANIFLEX™ [Hytrel® (Cream)]
PU = POLYURETHANE (Brown)
TF = PTFE (White)
WF = WIL-FLEX™ [Santoprene®]
EP = EPDM

SPECIALTY CODES

0023 Wing nuts
0067 Saniflo™ FDA, Wil-Gard II™ 220V
0070 Saniflo™ FDA
0079 Tri-clamp fittings, wing nuts
0080 Tri-clamp fittings ONLY
0100 Wil-Gard II™ 110V
0102 Wil-Gard II™ sensor wires ONLY
0103 Wil-Gard II™ 220V
0120 Saniflo™ FDA, Wil-Gard II™ 110V
0206 PFA coated hardware, Wil-Gard II™ sensor wires ONLY
0390 CSA Approved
0495 U.L. Approved
0502 PFA coated hardware
0603 PFA coated hardware, Wil Gard 110V
0608 PFA coated hardware, Wil Gard 220V

NOTE: The Wilden UL 79 Listed products covered by this manual are PX1 models followed by AA or SS, followed by AA, followed by A, followed by BNS, followed by BN, followed by A or S, followed by BN, followed by 0495. Wilden UL Listed pumps have been evaluated for use at a 25 C (77F) ambient temperature with a maximum inlet pressure of 3.4 Bar (50 PSI)..

PRO-FLO® PROGRESSIVE PUMP TECHNOLOGY

WILDEN® A DOVER COMPANY

HOW IT WORKS

The Wilden diaphragm pump is an air-operated, positive displacement, self-priming pump. These drawings show the flow pattern through the pump upon its initial stroke. It is assumed the pump has no fluid in it prior to its initial stroke.

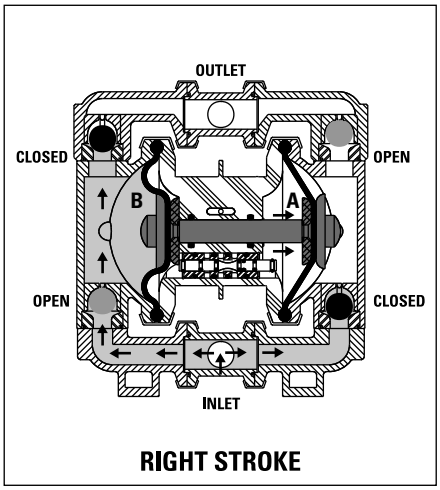

FIGURE 1 The air valve directs pressurized air to the back side of diaphragm A. The compressed air is applied directly to the liquid column separated by elastomeric diaphragms. The diaphragm acts as a separation membrane between the compressed air and liquid, balancing the load and removing mechanical stress from the diaphragm. The compressed air moves the diaphragm away from the center block of the pump. The opposite diaphragm is pulled in by the shaft connected to the pressurized diaphragm. Diaphragm B is on its suction stroke; air behind the diaphragm has been forced out to the atmosphere through the exhaust port of the pump. The movement of diaphragm B toward the center block of the pump creates a vacuum within chamber B. Atmospheric pressure forces fluid into the inlet manifold forcing the inlet valve ball off its seat. Liquid is free to move past the inlet valve ball and fill the liquid chamber (see shaded area).

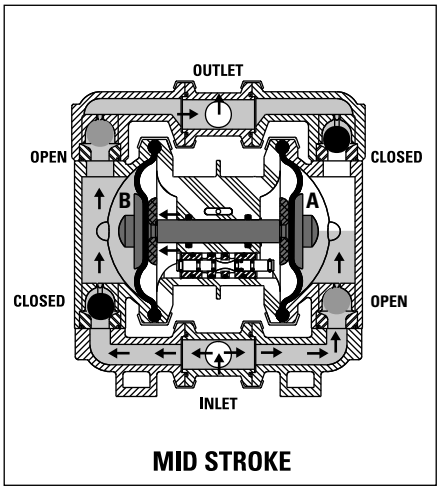

FIGURE 2 When the pressurized diaphragm, diaphragm A, reaches the limit of its discharge stroke, the air valve redirects pressurized air to the back side of diaphragm B. The pressurized air forces diaphragm B away from the center block while pulling diaphragm A to the center block. Diaphragm B is now on its discharge stroke. Diaphragm B forces the inlet valve ball onto its seat due to the hydraulic forces developed in the liquid chamber and manifold of the pump. These same hydraulic forces lift the discharge valve ball off its seat, while the opposite discharge valve ball is forced onto its seat, forcing fluid to flow through the pump discharge. The movement of diaphragm A toward the center block of the pump creates a vacuum within liquid chamber A. Atmospheric pressure forces fluid into the inlet manifold of the pump. The inlet valve ball is forced off its seat allowing the fluid being pumped to fill the liquid chamber.

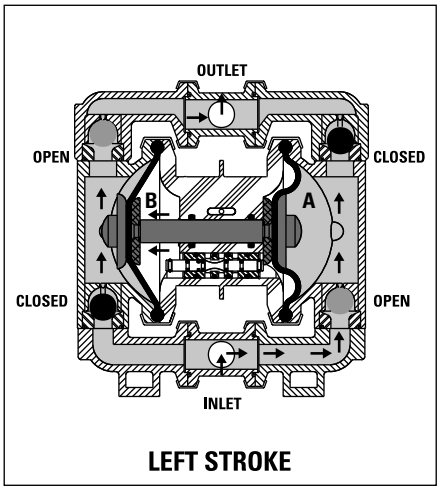

FIGURE 3 At completion of the stroke, the air valve again redirects air to the back side of diaphragm A, which starts diaphragm B on its exhaust stroke. As the pump reaches its original starting point, each diaphragm has gone through one exhaust and one discharge stroke. This constitutes one complete pumping cycle. The pump may take several cycles to completely prime depending on the conditions of the application.

PRO-FLO® PROGRESSIVE PUMP TECHNOLOGY

HOW IT WORKS—AIR DISTRIBUTION SYSTEM

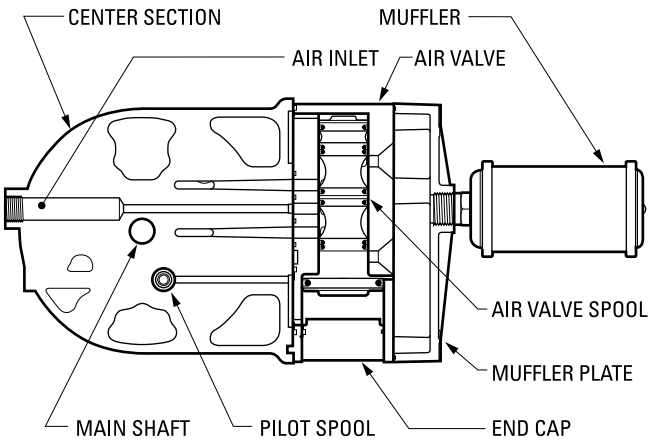

The Pro-Flo® patented air distribution system incorporates two moving parts: the air valve spool and the pilot spool. The heart of the system is the air valve spool and air valve. This valve design incorporates an unbalanced spool. The smaller end of the spool is pressurized continuously, while the large end is alternately pressurized then exhausted to move the spool. The spool directs pressurized air to one air chamber while exhausting the other. The air causes the main shaft/diaphragm assembly to shift to one side — discharging liquid on that side and pulling liquid in on the other side. When the shaft reaches the end of its stroke, the inner piston actuates the pilot spool, which pressurizes and exhausts the large end of the air valve spool. The repositioning of the air valve spool routes the air to the other air chamber.

DIMENSIONAL DRAWINGS

P1 METAL

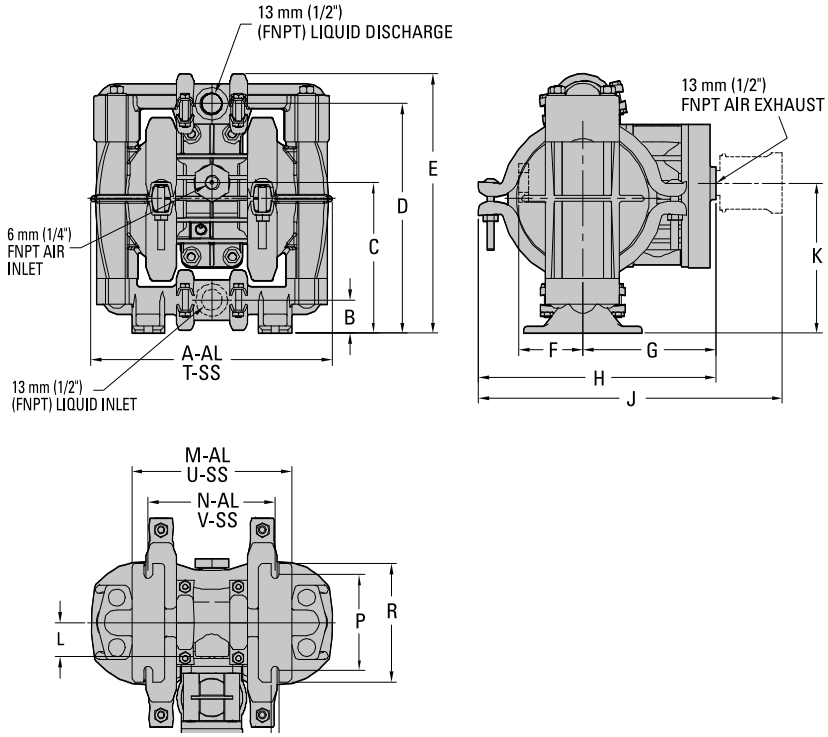

DIMENSIONS

ITEM	METRIC (mm)	STANDARD (inch)
A	208	8.2
B	28	1.1
C	130	5.1
D	198	7.8
E	224	8.8
F	53	2.1
G	114	4.5
H	206	8.1
J	262	10.3
K	130	5.1
L	30	1.2
M	137	5.4
N	109	4.3
P	84	3.3
R	102	4.0
S	8	0.3
T	203	8.0
U	142	5.6
V	112	4.4

BSPT threads available. REV. E

P1 METAL SANIFLO FDA

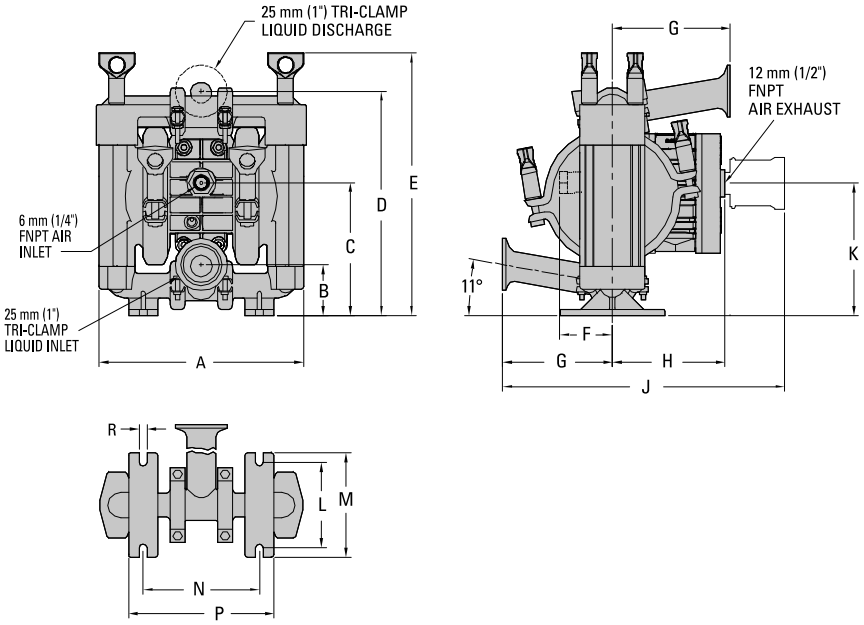

DIMENSIONS

ITEM	METRIC (mm)	STANDARD (inch)
A	203	8.0
B	53	2.1
C	130	5.1
D	218	8.6
E	257	10.1
F	53	2.1
G	114	4.5
H	114	4.5
J	287	11.3
K	130	5.1
L	84	3.3
M	102	4.0
N	84	3.3
P	142	5.6
R	8	0.3

REV. D

PX1 METAL

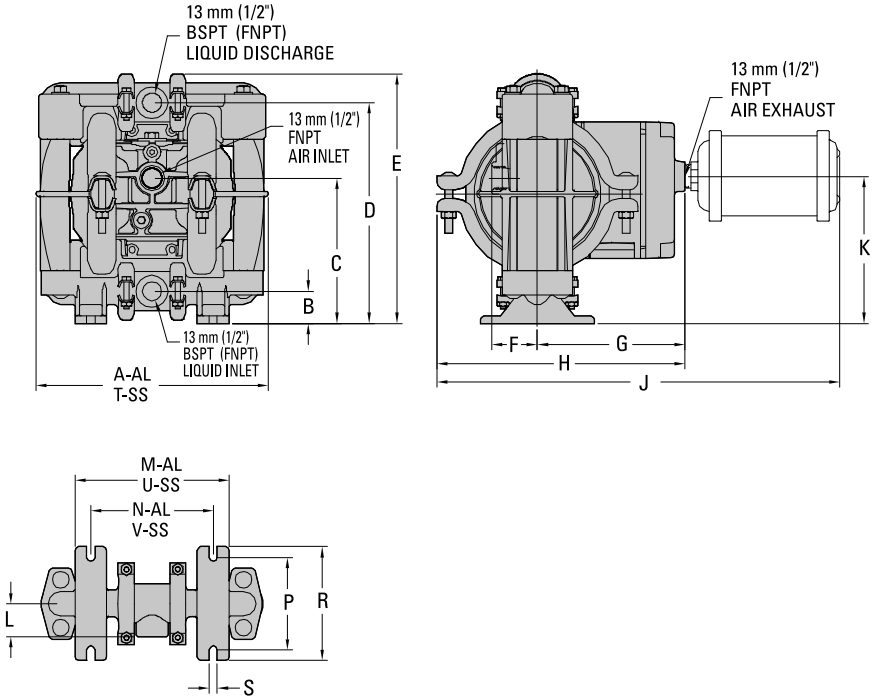

DIMENSIONS

ITEM	METRIC (mm)	STANDARD (inch)
A	208	8.2
B	28	1.1
C	130	5.1
D	198	7.8
E	224	8.8
F	41	1.6
G	132	5.2
H	221	8.7
J	361	14.2
K	132	5.2
L	30	1.2
M	137	5.4
N	109	4.3
P	84	3.3
R	102	4.0
S	8	0.3
T	203	8.0
U	142	5.6
V	112	4.4

BSPT threads available. REV. A

PX1 METAL SANIFLO FDA

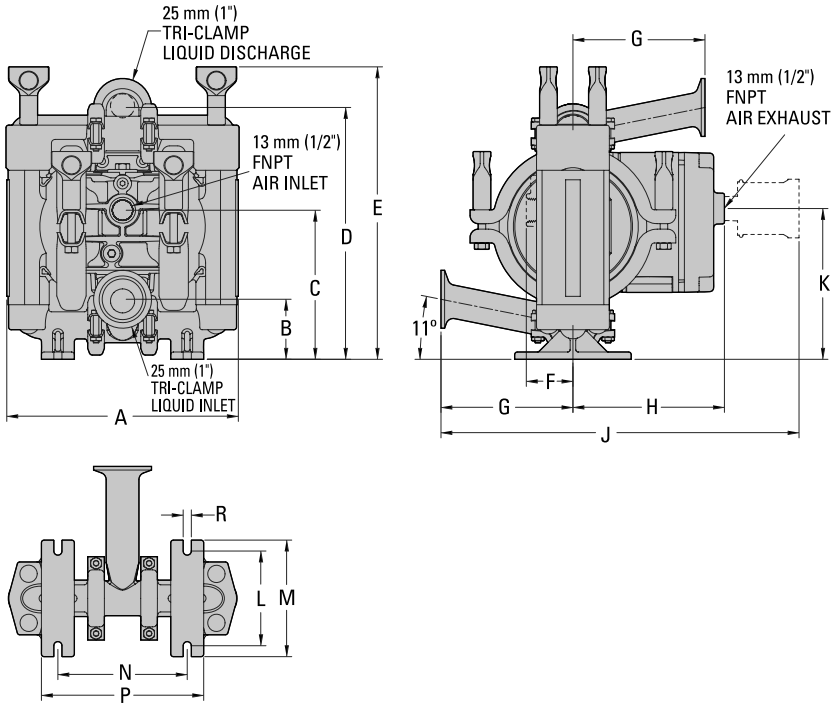

DIMENSIONS

ITEM	METRIC (mm)	STANDARD (inch)
A	203	8.0
B	53	2.1
C	130	5.1
D	218	8.6
E	257	10.1
F	41	1.6
G	114	4.5
H	132	5.2
J	386	15.2
K	132	5.2
L	84	3.3
M	102	4.0
N	112	4.4
P	142	5.6
R	8	0.3

REV. D

P1 METAL RUBBER-FITTED

Height..... 224 mm (8.8")
Width..... 208 mm (8.2")
Depth ..... 206 mm (8.1")
Ship Weight ..... Aluminum 6 kg (13 lbs)
Stainless Steel 9 kg (20 lbs)
Air Inlet..... 6 mm (1/4")
Inlet..... 13 mm (1/2")
Outlet ..... 13 mm (1/2")
Suction Lift ..... 5.8 m Dry (19.0')
9.5 m Wet (31.0')
Displacement per Stroke . .11 l (0.029 gal.)[1]
Max. Flow Rate..... 58.67 lpm (15.5 gpm)
Max. Size Solids ..... 1.59 mm (1/16")

[1]Displacement per stroke was calculated at 4.8 Bar (70 psig) air inlet pressure against a 2 Bar (30 psig) head pressure.

Example: To pump 18.9 lpm (5 gpm) against a discharge pressure head of 2.7 Bar (40 psig) requires 4 Bar (60 psig) and 5.92 Nm^3/h (3.5 scfm) air consumption. (See dot on chart.)

Caution: Do not exceed 8.6 Bar (125 psig) air supply pressure.

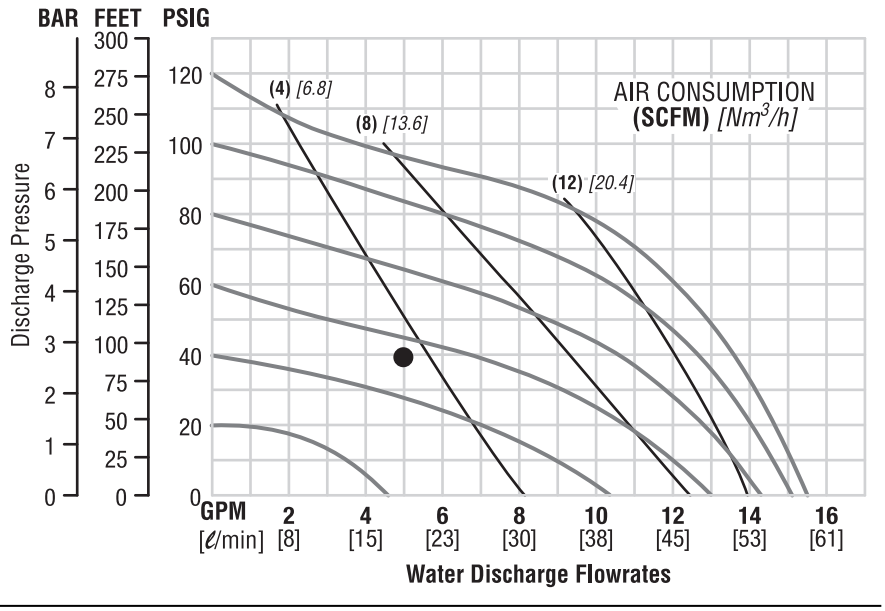

Flow rates indicated on chart were determined by pumping water.

For optimum life and performance, pumps should be specified so that daily operation parameters will fall in the center of the pump performance curve.

P1 METAL TPE-FITTED

Height..... 224 mm (8.8")
Width..... 208 mm (8.2")
Depth ..... 206 mm (8.1")
Ship Weight ..... Aluminum 6 kg (13 lbs)
Stainless Steel 9 kg (20 lbs)
Air Inlet..... 6 mm (1/4")
Inlet..... 13 mm (1/2")
Outlet ..... 13 mm (1/2")
Suction Lift ..... 5.2 m Dry (17.0')
9.5 m Wet (31.0')
Displacement per Stroke . .11 l (0.029 gal.)[1]
Max. Flow Rate..... 58.30 lpm (15.4 gpm)
Max. Size Solids ..... 1.59 mm (1/16")

[1]Displacement per stroke was calculated at 4.8 Bar (70 psig) air inlet pressure against a 2 Bar (30 psig) head pressure.

Example: To pump 18.9 lpm (5 gpm) against a discharge pressure head of 2.7 Bar (40 psig) requires 4 Bar (60 psig) and 5.92 Nm^3/h (3.5 scfm) air consumption. (See dot on chart.)

Caution: Do not exceed 8.6 Bar (125 psig) air supply pressure.

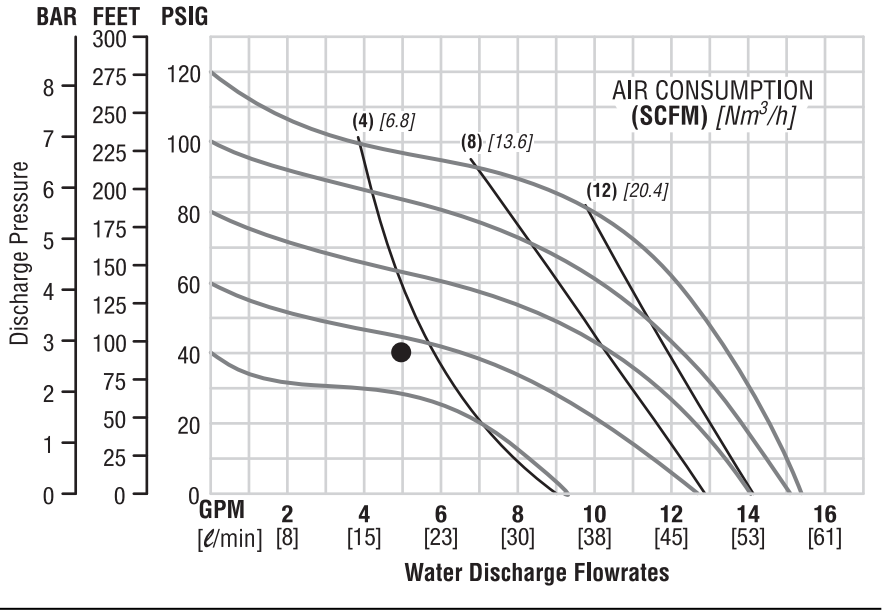

Flow rates indicated on chart were determined by pumping water.

For optimum life and performance, pumps should be specified so that daily operation parameters will fall in the center of the pump performance curve.

PERFORMANCE

P1 METAL PTFE-FITTED

Height.....224 mm (8.8")
Width.....208 mm (8.2")
Depth .....206 mm (8.1")
Ship Weight ..... Aluminum 6 kg (13 lbs)
Stainless Steel 9.2 kg (20 lbs)
Air Inlet.....6 mm (1/4")
Inlet.....13 mm (1/2")
Outlet .....13 mm (1/2")
Suction Lift ..... 4.9 m Dry (16.0')
9.5 m Wet (31.0')
Displacement per Stroke . .09 l (0.025 gal.)[1]
Max. Flow Rate.....54.41 lpm (14.4 gpm)
Max. Size Solids .....1.59 mm (1/16")

[1]Displacement per stroke was calculated at 4.8 Bar (70) air inlet pressure against a 2 Bar (30 psig) head pressure.

Example: To pump 18.9 lpm (5 gpm) against a discharge pressure head of 2.7 Bar (40 psig) requires 4 Bar (60 psig) and 5.92 Nm^3/h (3.5 scfm) air consumption. (See dot on chart.)

Caution: Do not exceed 8.6 Bar (125 psig) air supply pressure.

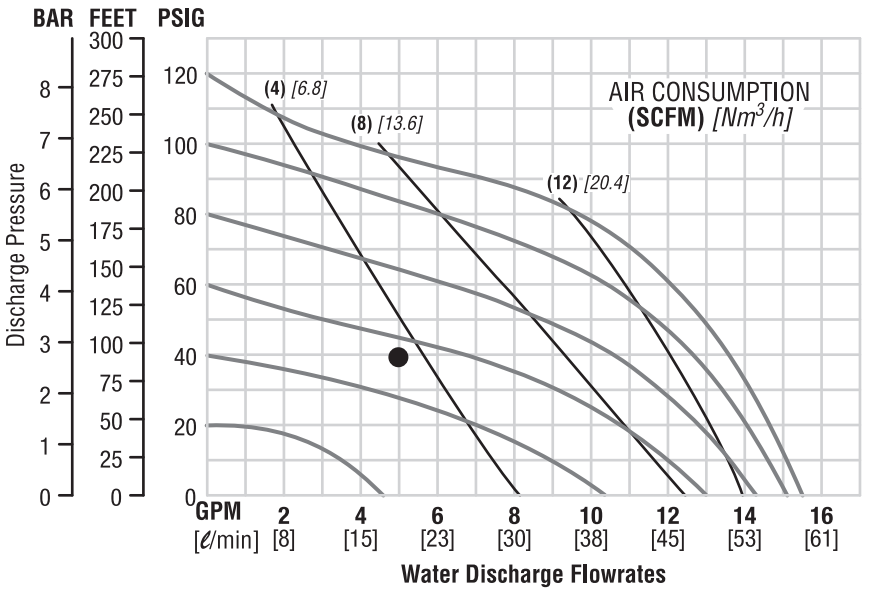

Flow rates indicated on chart were determined by pumping water.

For optimum life and performance, pumps should be specified so that daily operation parameters will fall in the center of the pump performance curve.

PRO-FLO® PROGRESSIVE PUMP TECHNOLOGY

WILDEN

SUCTION LIFT CURVE

P1 METAL

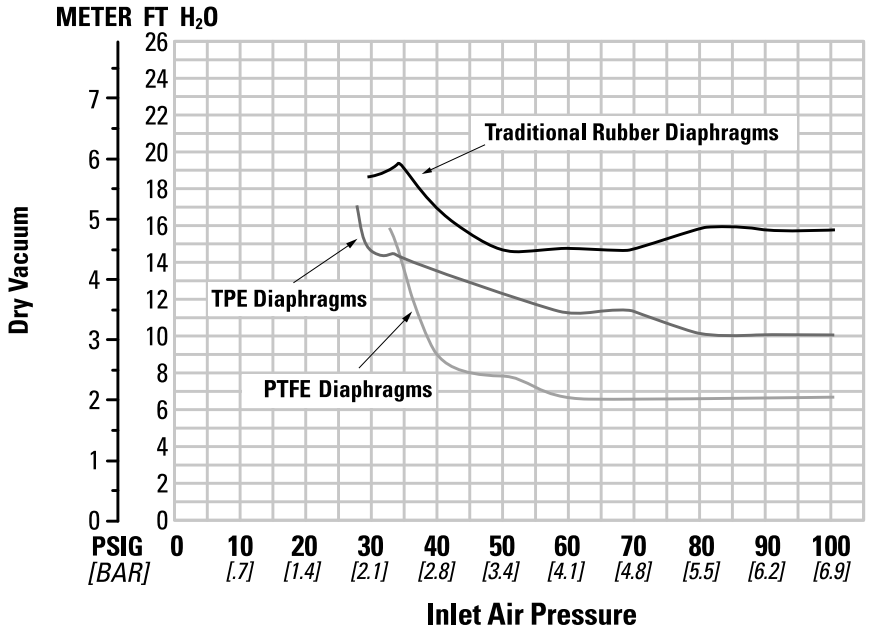

PRO-FLO X PROGRESSIVE PUMP TECHNOLOGY

SUCTION LIFT CURVE

PX1 METAL

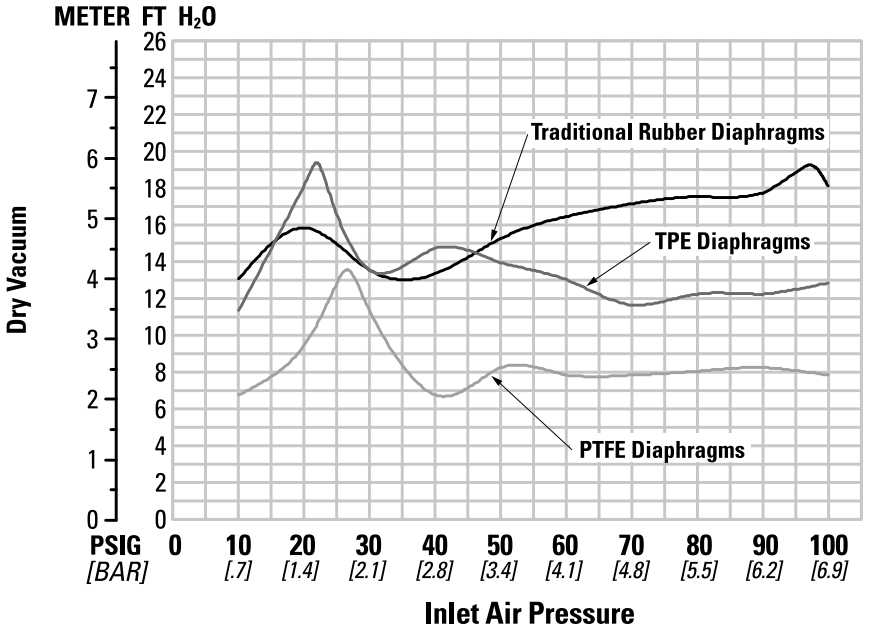

Suction lift curves are calibrated for pumps operating at 305 m (1,000') above sea level. This chart is meant to be a guide only. There are many variables which can affect your pump's operating characteristics. The number of intake and discharge elbows, viscosity of pumping fluid, elevation (atmospheric pressure) and pipe friction loss all affect the amount of suction lift your pump will attain.

SUGGESTED INSTALLATION

Wilden pumps are designed to meet the performance requirements of even the most demanding pumping applications. They have been designed and manufactured to the highest standards and are available in a variety of liquid path materials to meet your chemical resistance needs. Refer to the performance section of this manual for an in-depth analysis of the performance characteristics of your pump. Wilden offers the widest variety of elastomer options in the industry to satisfy temperature, chemical compatibility, abrasion resistance and flex concerns.

The suction pipe size should be at least the equivalent or larger than the diameter size of the suction inlet on your Wilden pump. The suction hose must be non-collapsible, reinforced type as these pumps are capable of pulling a high vacuum. Discharge piping should also be the equivalent or larger than the diameter of the pump discharge which will help reduce friction losses. It is critical that all fittings and connections are airtight or a reduction or loss of pump suction capability will result.

INSTALLATION: Months of careful planning, study, and selection efforts can result in unsatisfactory pump performance if installation details are left to chance.

Premature failure and long term dissatisfaction can be avoided if reasonable care is exercised throughout the installation process.

LOCATION: Noise, safety, and other logistical factors usually dictate where equipment will be situated on the production floor. Multiple installations with conflicting requirements can result in congestion of utility areas, leaving few choices for additional pumps.

Within the framework of these and other existing conditions, every pump should be located in such a way that six key factors are balanced against each other to maximum advantage.

ACCESS: First of all, the location should be accessible. If it's easy to reach the pump, maintenance personnel will have an easier time carrying out routine inspections and adjustments. Should major repairs become necessary, ease of access can play a key role in speeding the repair process and reducing total downtime.

AIR SUPPLY: Every pump location should have an air line large enough to supply the volume of air necessary to achieve the desired pumping rate. Use air pressure up to a maximum of 8.6 bar (125 psig) depending on pumping requirements.

For best results, the pumps should use a 5µ (micron) air filter, needle valve and regulator. The use of an air filter before the pump will ensure that the majority of any pipeline contaminants will be eliminated.

NOTE: Canadian Standards Association (CSA) configured pumps should not exceed 6.9 bar (100 psig) sweet gas supply pressure. ONLY CSA configured pumps should be operated using gas.

SOLENOID OPERATION: When operation is controlled by a solenoid valve in the air line, three-way valves should be used. This valve allows trapped air between the valve and the pump to bleed off which improves pump performance. Pumping volume can be estimated by counting the number of strokes per minute and then multiplying the figure by the displacement per stroke.

MUFFLER: Sound levels are reduced below OSHA specifications using the standard Wilden muffler. Other mufflers can be used to further reduce sound levels, but they usually reduce pump performance.

ELEVATION: Selecting a site that is well within the pump's dynamic lift capability will assure that loss-of-prime issues will be eliminated. In addition, pump efficiency can be adversely affected if proper attention is not given to site location.

PIPING: Final determination of the pump site should not be made until the piping challenges of each possible location have been evaluated. The impact of current and future installations should be considered ahead of time to make sure that inadvertent restrictions are not created for any remaining sites.

For U.L. listed pumps, all installation must conform with NFPA 30, NFPA 30A, and other applicable codes. All pipe connections are to be made using U.L. classified gasoline-resistant pipe compound. Exhaust port is to be connected to pipe or tubing to be routed outdoors or other location determined to be equivalent.

The best choice possible will be a site involving the shortest and straightest hook-up of suction and discharge piping. Unnecessary elbows, bends, and fittings should be avoided. Pipe sizes should be selected to keep friction losses within practical limits. All piping should be supported independently of the pump. In addition, the piping should be aligned to avoid placing stress on the pump fittings.

Flexible hose can be installed to aid in absorbing the forces created by the natural reciprocating action of the pump. If the pump is to be bolted down to a solid location, a mounting pad placed between the pump and the foundation will assist in minimizing pump vibration. Flexible connections between the pump and rigid piping will also assist in minimizing pump vibration. If quick-closing valves are installed at any point in the discharge system, or if pulsation within a system becomes a problem, a surge suppressor (SD Equalizer®) should be installed to protect the pump, piping and gauges from surges and water hammer.

If the pump is to be used in a self-priming application, make sure that all connections are airtight and that the suction lift is within the model's ability. Note: Materials of construction and elastomer material have an effect on suction lift parameters. Please refer to the performance section for specifics.

When pumps are installed in applications involving flooded suction or suction head pressures, a gate valve should be installed in the suction line to permit closing of the line for pump service.

Pumps in service with a positive suction head are most efficient when inlet pressure is limited to 0.5–0.7 bar (7–10 psig). Premature diaphragm failure may occur if positive suction is 0.7 bar (10 psig) and higher.

SUBMERSIBLE APPLICATIONS: Pro-Flo X™ pumps can be used for submersible applications, when using the Pro-Flo X™ submersible option. Turbo-Flo™ pumps can also be used for submersible applications.

NOTE: Pro-Flo® and Accu-Flo™ pumps are not submersible.

ALL WILDEN PUMPS ARE CAPABLE OF PASSING SOLIDS. A STRAINER SHOULD BE USED ON THE PUMP INTAKE TO ENSURE THAT THE PUMP'S RATED SOLIDS CAPACITY IS NOT EXCEEDED.

CAUTION: DO NOT EXCEED 8.6 BAR (125 PSIG) AIR SUPPLY PRESSURE.

CAUTION: CANADIAN STANDARDS ASSOCIATION (CSA) CONFIGURED PUMPS SHOULD NOT EXCEED 6.9 BAR (100 PSIG) SWEET GAS SUPPLY PRESSURE.

CAUTION: FOR U.L. LISTED PUMPS, DO NOT EXCEED 3.4 BAR (50 PSIG) AIR SUPPLY PRESSURE.

SUGGESTED INSTALLATION

This illustration is a generic representation of an air-operated double-diaphragm pump.

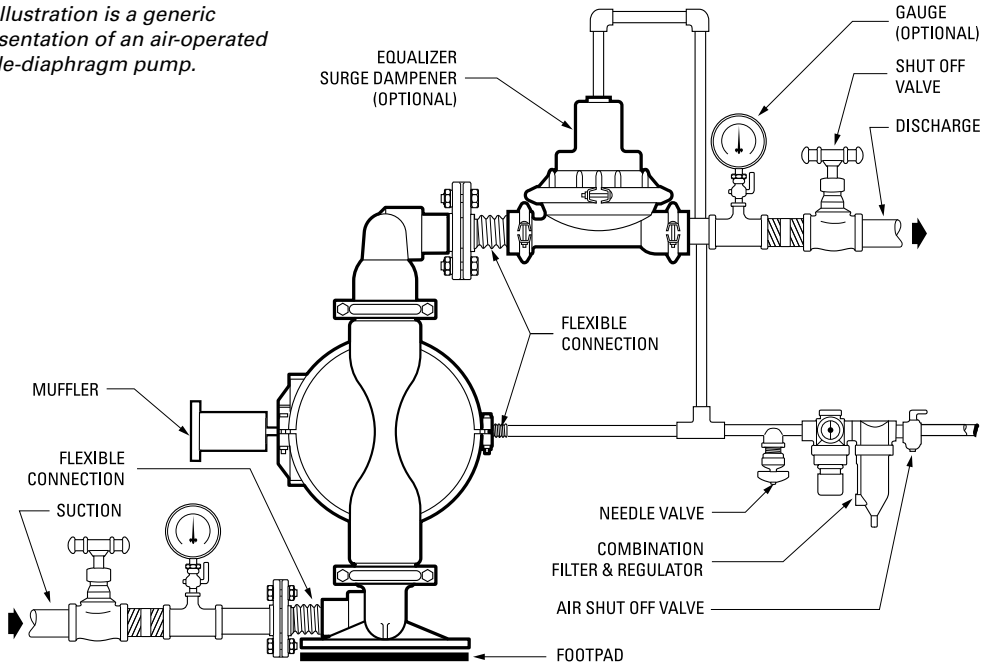

NOTE: In the event of a power failure, the shut off valve should be closed, if the restarting of the pump is not desirable once power is regained.

AIR OPERATED PUMPS: To stop the pump from operating in an emergency situation, simply close the shut off valve (user supplied) installed in the air supply line. A properly functioning valve will stop the air supply to the pump, therefore stopping output. This shut off valve should be located far enough away from the pumping equipment such that it can be reached safely in an emergency situation.

SUGGESTED OPERATION & MAINTENANCE

OPERATION: P1 and PX1 pumps are pre-lubricated, and do not require in-line lubrication. Additional lubrication will not damage the pump, however if the pump is heavily lubricated by an external source, the pump's internal lubrication may be washed away. If the pump is then moved to a non-lubricated location, it may need to be disassembled and re-lubricated as described in the ASSEMBLY/DISASSEMBLY INSTRUCTIONS.

Pump discharge rate can be controlled by limiting the volume and/or pressure of the air supply to the pump. A regulator is used to control air pressure while a needle valve is used to control volume. Pump discharge rate can also be controlled by throttling the pump discharge by partially closing a valve in the discharge line of the pump. This action increases friction loss which reduces flow rate. (See Section 5.) This is useful when the need exists to control the pump from a remote location. When the pump discharge pressure equals or exceeds the air supply pressure, the pump will stop; no bypass or pressure relief valve is needed, and pump damage will not occur. The pump has reached a "deadhead" situation and can be restarted by reducing the fluid discharge pressure or increasing the air inlet pressure.

The P1 and PX1 pumps run solely on compressed air and do not generate heat, therefore your process fluid temperature will not be affected.

NOTE: Canadian Standards Association (CSA) configured pumps run solely on gas and do not generate heat.

MAINTENANCE AND INSPECTIONS: Since each application is unique, maintenance schedules may be different for every pump. Frequency of use, line pressure, viscosity and abrasiveness of process fluid all affect the parts life of a Wilden pump. Periodic inspections have been found to offer the best means for preventing unscheduled pump downtime. Personnel familiar with the pump's construction and service should be informed of any abnormalities that are detected during operation.

RECORDS: When service is required, a record should be made of all necessary repairs and replacements. Over a period of time, such records can become a valuable tool for predicting and preventing future maintenance problems and unscheduled downtime. In addition, accurate records make it possible to identify pumps that are poorly suited to their applications.

TROUBLESHOOTING

Pump will not run or runs slowly.

1. Ensure that the air inlet pressure is at least 0.3 Bar (5 psig) above startup pressure and that the differential pressure (the difference between air inlet and liquid discharge pressures) is not less than 0.7 Bar (10 psig).
2. Check air inlet filter for debris (see recommended installation).
3. Check for extreme air leakage (blow by) which would indicate worn seals/bores in the air valve, pilot spool, main shaft.
4. Disassemble pump and check for obstructions in the air passageways or objects which would obstruct the movement of internal parts.
5. Check for sticking ball check valves. If material being pumped is not compatible with pump elastomers, swelling may occur. Replace ball check valves and seals with proper elastomers. Also, as the check valve balls wear out, they become smaller and can become stuck in the seats. In this case, replace balls and seats.
6. Check for broken inner piston which will cause the air valve spool to be unable to shift.
7. Remove plug from pilot spool exhaust.

Pump runs but little or no product flows.

1. Check for pump cavitation; slow pump speed down to allow thick material to flow into liquid chambers.
2. Verify that vacuum required to lift liquid is not greater than the vapor pressure of the material being pumped (cavitation).
3. Check for sticking ball check valves. If material being pumped is not compatible with pump elastomers, swelling may occur. Replace ball check valves and seats with proper elastomers. Also, as the check valve balls wear out, they become smaller and can become stuck in the seats. In this case, replace balls and seats.

Pump air valve freezes.

1. Check for excessive moisture in compressed air. Either install a dryer or hot air generator for compressed air. Alternatively, a coalescing filter may be used to remove the water from the compressed air in some applications.

Air bubbles in pump discharge.

1. Check for ruptured diaphragm.
2. Check tightness of outer pistons (refer to Section 7).
3. Check tightness of fasteners and integrity of o-rings and seals, especially at intake manifold.
4. Ensure pipe connections are airtight.

Product comes out air exhaust.

1. Check for diaphragm rupture.
2. Check tightness of outer pistons to shaft.

P1 METAL

TOOLS REQUIRED:

- 3/8" Box Wrench
- 7/16" Wrench
- Adjustable Wrench
- Vise equipped with soft jaws (such as plywood, plastic or other suitable material)

CAUTION: Before any maintenance or repair is attempted, the compressed air line to the pump should be disconnected and all air pressure allowed to bleed from the pump. Disconnect all intake, discharge, and air lines. Drain the pump by turning it upside down and allowing any fluid to flow into a suitable container. Be aware of any hazardous effects of contact with your process fluid.

NOTE: The model photographed for these instructions is a Pro-FloX™ version and incorporates rubber diaphragms, balls, and seats.

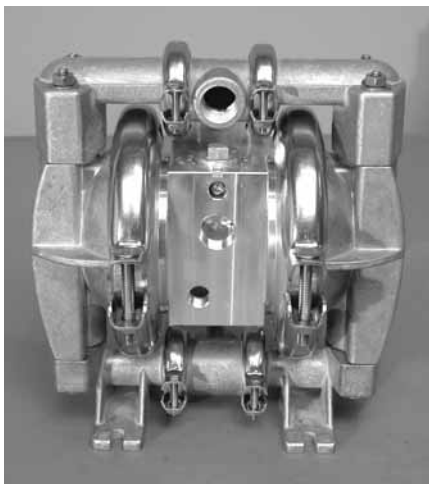

Step 1

Prior to disassembly, alignment marks should be placed on the liquid chambers and air chamber to assist with proper alignment during reassembly.

Step 2

Using a 7/16" box wrench, remove the nuts that connect the inlet and discharge manifolds to the center section assembly.

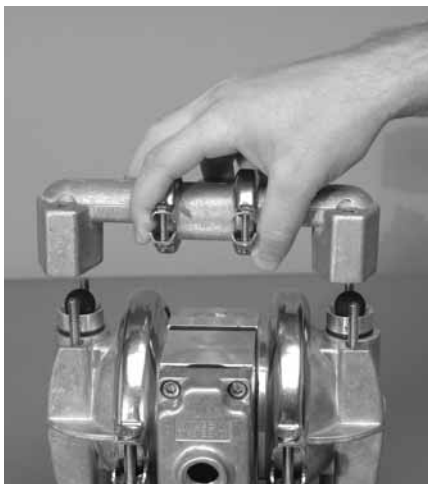

Step 3

Next, remove the discharge manifold from the pump.

PUMP DISASSEMBLY

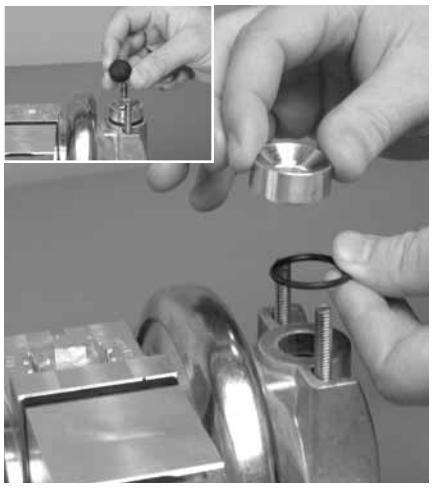

Step 4

Remove the discharge valve ball, valve seat and valve seat o-ring and inspect for signs of wear and replace if necessary.

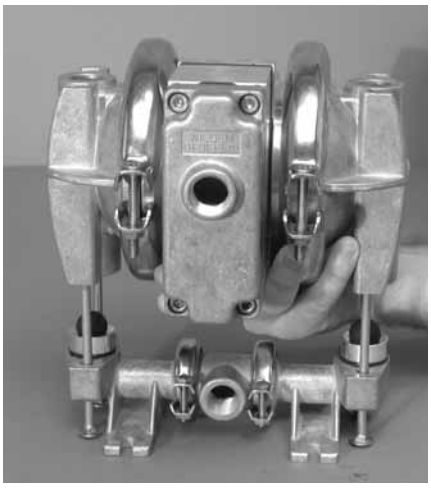

Step 5

Now the center section assembly can be removed from the inlet manifold.

Step 6

Remove the inlet valve ball, valve seat and valve seat o-ring and inspect for signs of wear and/ or chemical attack. Replace if necessary.

Step 7

Using a 3/8" wrench, remove the small clamp band that connects the manifold elbows to the tee section.

Step 8

Remove the tee section o-rings and inspect for signs of wear and/ or chemical attack. Replace if necessary.

Step 9

Using a 7/16" box end wrench, remove the large clamp bands. With the clamp bands removed, lift the liquid chamber away from the center section.

PUMP DISASSEMBLY

Step 10

Using an adjustable wrench or rotating the diaphragm by hand, remove the diaphragm assembly from the center section.

Step 11A

Due to varying torque values, one of the two situations will occur:

A) The outer piston, diaphragm and inner piston will separate from the shaft which remains connected to the opposite side diaphragm assembly.

Step 11B

B) The diaphragm assembly and shaft remain connected leaving the opposite side diaphragm assembly within the opposite side of the center section assembly.

Step 13

To remove the diaphragm assembly from the shaft, secure shaft with soft jaws (a vise fitted with plywood or other suitable material) to ensure shaft is not nicked, scratched, or gouged. Using an adjustable wrench, remove the diaphragm assembly from shaft. Inspect all parts for wear and replace with genuine Wilden parts if necessary.

GROUNDING STRAP FOR CSA PX1 PUMPS

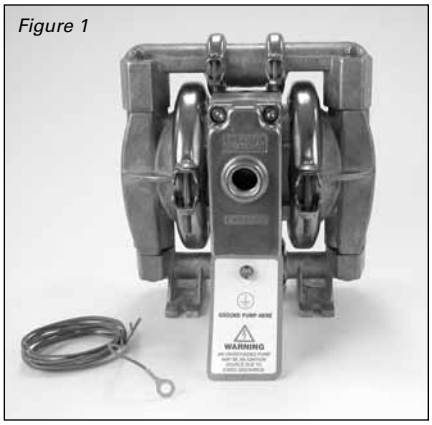

Figure 1

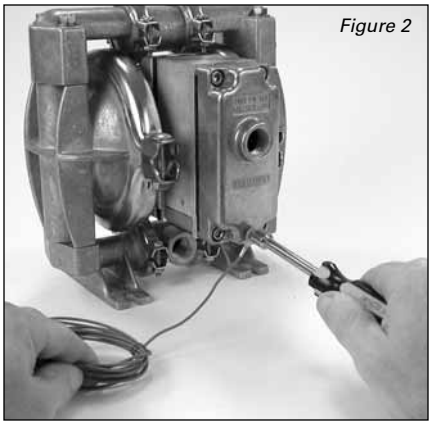

Figure 2

Canadian Standards Association (CSA) configured pumps must be electrically grounded using the grounding strap provided (Figure 1). Improper grounding can cause improper and dangerous operation. To properly attach the grounding strap to a CSA configured PX1 pump, identify the designated grounding location on the muffler plate; using the provided self-tapping screw and grounding wire, thread the grounding screw through the grounding wire lug, into the muffler plate and tighten securely (figure 2). Completion of the pump grounding procedure must be done in accordance with local codes, or in the absence of local codes, an industrial or nationally recognized code having jurisdiction over the specified installation.

AIR VALVE/CENTER SECTION DISASSEMBLY

TOOLS REQUIRED:

- 3/16" Hex Head Wrench
- 7/32" Hex Head Wrench
- Snap Ring Pliers
- O-Ring Pick

CAUTION: Before any maintenance or repair is attempted, the compressed air line to the pump should be disconnected and all air pressure allowed to bleed from the pump. Disconnect all intake, discharge, and air lines. Drain the pump by turning it upside down and allowing any fluid to flow into a suitable container. Be aware of hazardous effects of contact with your process fluid.

Step 1

Using a 3/16" hex head wrench, loosen the air valve bolts.

Step 2

Remove the air valve and muffler plate from the center section.

Step 3

Remove the air valve gasket and inspet for nicks, gouges and chemical attack. Replace if necessary with genuine Wilden parts. Note: When installing the air valve gasket onto the center section assembly, position gasket with the grooved side facing away from the center section.

AIR VALVE/CENTER SECTION DISASSEMBLY

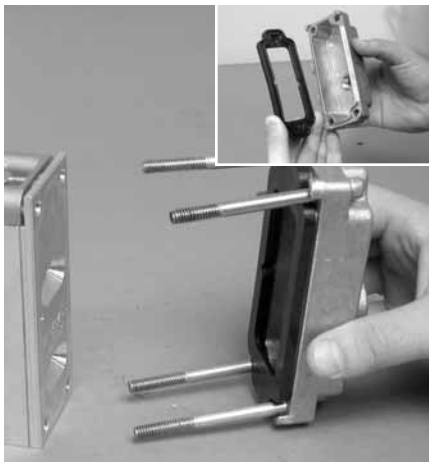

Step 4

Remove muffler plate gasket and inspect. Replace if necessary.

Step 5

Remove air valve end cap to expose air valve spool. NOTE: The end cap cannot be removed until removing air valve bolts.

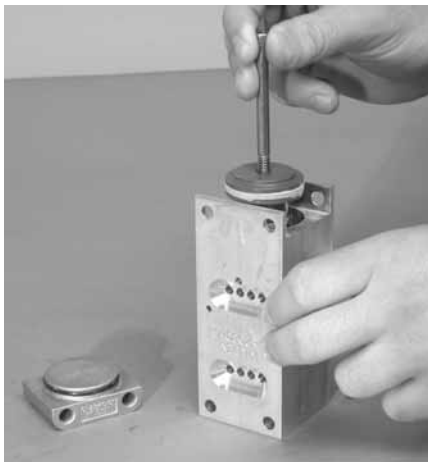

Step 6

Remove air valve spool from air valve body by threading one air valve bolt into the end of the spool and gently sliding the spool out of the air valve body. Inspect seals for signs of wear and replace entire assembly if necessary. Use caution when handling air valve spool to prevent damaging seals. NOTE: Seals should not be removed from assembly. Seals are not sold separately.

Step 7

Remove pilot spool retaining snap ring on both sides of center section with snap ring pliers.

Step 8

Remove pilot spool assembly from center section.

Step 9

Using an o-ring pick, gently remove the pilot spool retaining o-ring from the opposite side of the notched end of the spool. Gently remove the pilot spool from pilot spool sleeve and inspect for nicks, gouges and other signs of wear. Replace pilot spool assembly or outer sleeve o-rings if necessary. During re-assembly never insert the pilot spool into the sleeve with the "notched" end side first, this end incorporates the urethane o-ring and will be damaged as it slides over the ports cut in the pilot spool sleeve.

Step 10

AIR VALVE/CENTER SECTION DISASSEMBLY

Check center section shaft seals for signs of wear. If necessary, remove the shaft seals with an o-ring pick and replace.

WILDEN

SUBMERSIBLE PRO-FLO X™

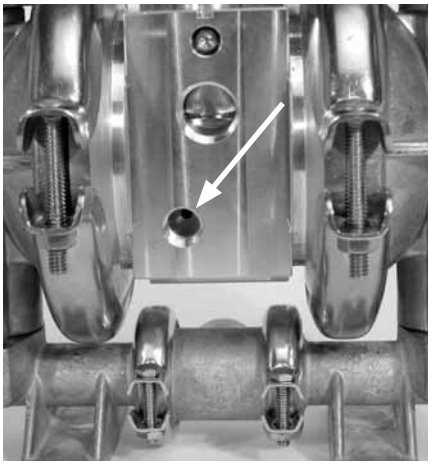

Step 1

Install a 1/4" NPT pipe plug (00-7010-08) into the pilot spool bleed port located at the front of the center section.

Non-Submersible

Submersible

Step 2

Next, install an optional submersible air valve gasket (01-2621-52). The submersible air valve gasket can be purchased as a spare part or included with the purchase of a new Pro-Flo X™ pump.

REASSEMBLY HINT & TIPS

ASSEMBLY:

Upon performing applicable maintenance to the air distribution system, the pump can now be reassembled. Please refer to the disassembly instructions for photos and parts placement. To reassemble the pump, follow the disassembly instructions in reverse order. The air distribution system needs to be assembled first, then the diaphragms and finally the wetted path. Please find the applicable torque specifications on this page. The following tips will assist in the assembly process.

- Clean the inside of the center section shaft bore to ensure no damage is done to new seals.
- Stainless bolts should be lubed to reduce the possibility of seizing during tightening.
- Level the water chamber side of the intake/discharge manifold to ensure a proper sealing surface. This is most easily accomplished by placing them on a flat surface prior to tightening their clamp bands to the desired torque (see this page for torque specs).
- Be sure to tighten outer pistons simultaneously on PTFE-fitted pumps to ensure proper torque values.
- Ensure proper mating of liquid chambers to manifolds prior to tightening vertical bolts. Overhang should be equal on both sides.
- Apply a small amount of Loctite 242 to the shaft interval threads before the diaphragm assembly.
- Concave side of disc spring in diaphragm assembly faces **toward** shaft.

PRO-FLO® MAXIMUM TORQUE SPECIFICATIONS

Description of Part	Maximum Torque
Air Valve, Pro-Flo®	3.1 N•m (27 in-lbs.)
Outer Piston	14.1 N•m (125 in)
Small Clamp Band	1.7 N•m (15 in)
Large Clamp Band (Rubber/TPE-Fitted)	9.0 N•m (80 in)
Large Clamp Band (PTFE-Fitted)	13.6 N•m (120 in)
Vertical Bolts	14.1 N•m (125 in)

PRO-FLO X™ MAXIMUM TORQUE SPECIFICATIONS

Description of Part	Maximum Torque
Air Valve, Pro-Flo X™	11.3 N•m (100 in-lbs.)
Outer Piston	14.1 N•m (125 in)
Small Clamp Band	1.7 N•m (15 in)
Large Clamp Band (Rubber/TPE-Fitted)	9.0 N•m (80 in)
Large Clamp Band (PTFE-Fitted)	13.6 N•m (120 in)
Vertical Bolts	14.1 N•m (125 in)

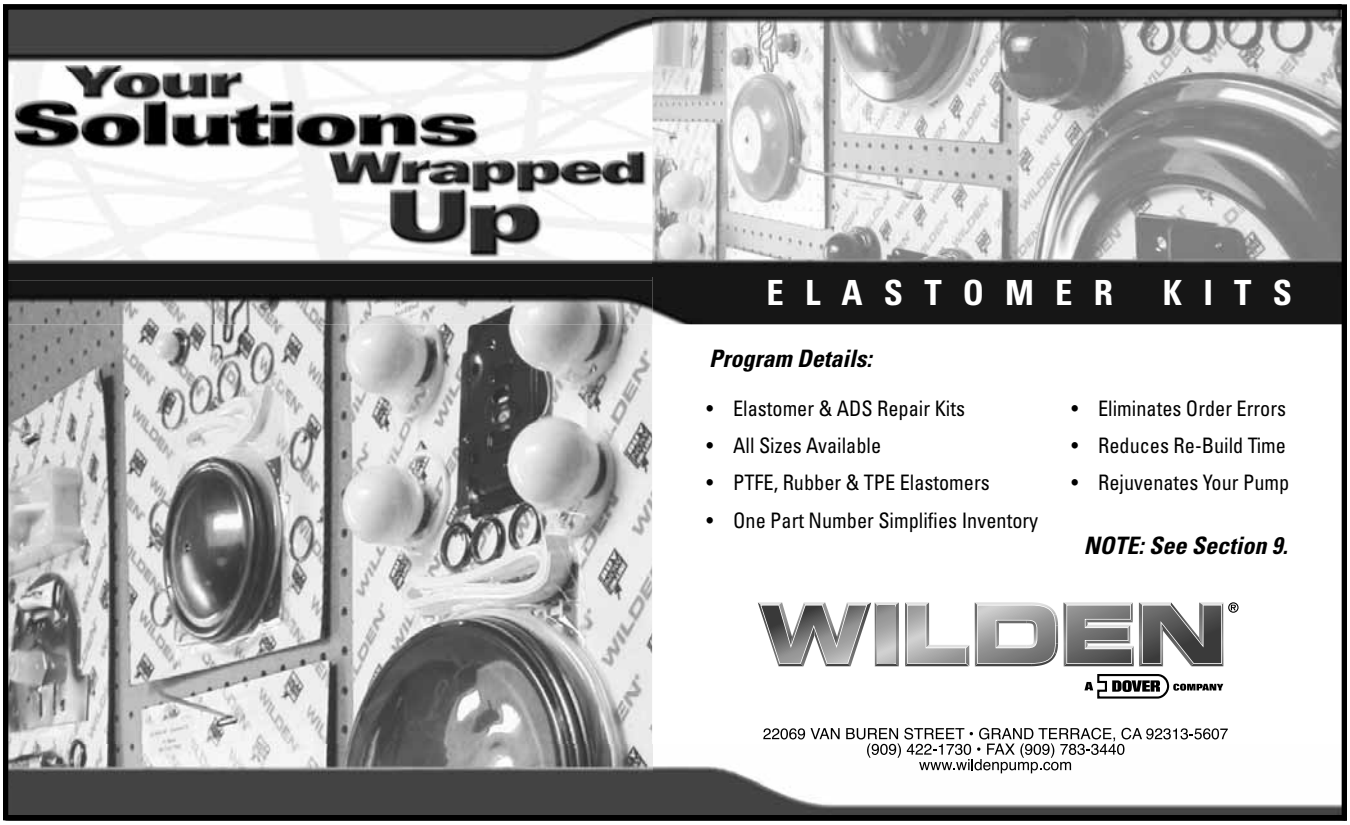

EXPLODED VIEW & PARTS LISTING

P1 METAL | RUBBER/TPE-FITTED | EXPLODED VIEW

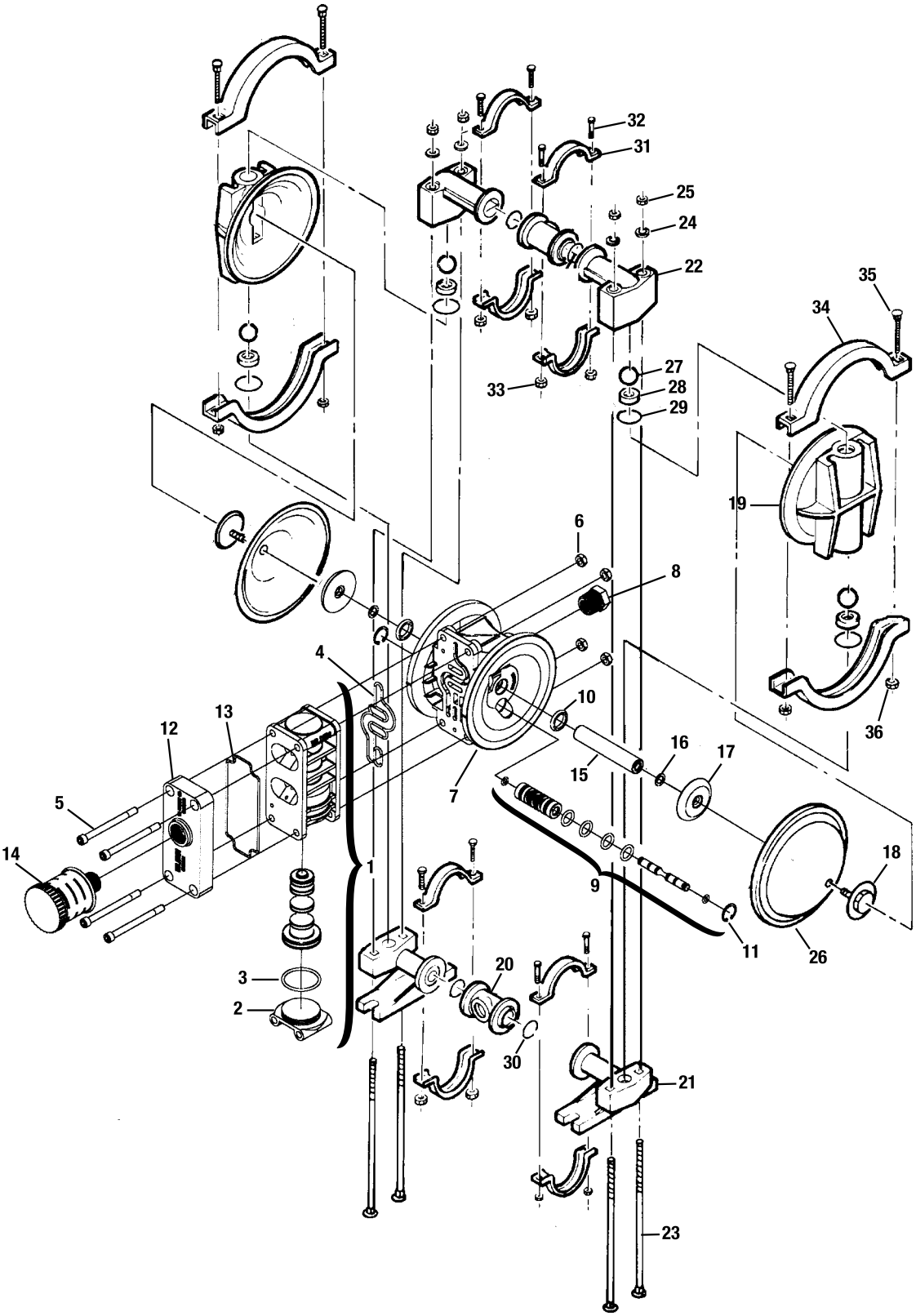

P1 METAL RUBBER/TPE-FITTED PARTS LISTING

Item	Part Description	Qty. Per Pump	P1/APPP P/N	P1/SPPP P/N	P1/SPPP/070 P/N
1	**Pro-Flo™ Air Valve Assembly[1]**	**1**	**01-2010-20**	**01-2010-20**	**01-2010-20**
2	End Cap	1	01-2332-20	01-2332-20	01-2332-20
3	O-Ring (-126), End Cap (Ø.1.362 x Ø.103)	1	01-2395-52	01-2395-52	01-2395-52
4	Gasket, Air Valve	1	01-2615-52	01-2615-52	01-2615-52
5	Screw, HSHC, Air Valve (1/4"-20 x 3")	4	01-6001-03	01-6001-03	01-6001-03
6	Nut, Hex, (1/4"-20)	4	04-6400-03	04-6400-03	04-6400-03
7	Center Section Assembly	1	01-3140-20	01-3140-20	01-3140-20
8	Bushing, Reducer	1	01-6950-20	01-6950-20	01-6950-20
9	Removable Pilot Sleeve Assembly	1	01-3880-99	01-3880-99	01-3880-99
10	**Shaft Seal**	**2**	**01-3220-55**	**01-3220-55**	**01-3220-55**
11	Retaining Ring	2	00-2650-03	00-2650-03	00-2650-03
12	Muffler Plate	1	01-3181-20	01-3181-20	01-3181-20
13	Gasket, Muffler Plate	1	01-3505-52	01-3505-52	01-3505-52
14	Muffler	1	02-3510-99	02-3510-99	02-3510-99
15	Shaft, Pro-Flo™	1	01-3810-03	01-3810-03	01-3810-03
16	Disc Spring	2	01-6802-08	01-6802-08	01-6802-08
17	Inner Piston	2	01-3711-08	01-3711-08	01-3711-08
18	Outer Piston	2	01-4570-01	01-4570-03	01-4570-03
19	Liquid Chamber	2	01-5000-01	01-5000-03	01-5000-03
20	Manifold Tee Section	2	01-5160-01	01-5160-03	01-5160-03-70
21	Inlet Manifold Elbow	2	01-5220-01	01-5220-03	01-5220-03
22	Discharge Manifold Elbow	2	01-5230-01	01-5230-03	01-5230-03
23	Screw, SHCS (Chamber Bolt) (1/4"-20 x 7 3/8)	4	01-6080-03	01-6080-03	01-6080-03
24	Vertical Bolt Washer (.2811.D. x .6250.D. x .065THR)	4	01-6730-03	01-6730-03	01-6730-03
25	Vertical Bolt Nut (1/4"-20)	4	04-6400-03	04-6400-03	04-6650-03-70
26	**Diaphragm**	**2**	*	*	**01-1010-56**
27	**Valve Ball**	**4**	*	*	**01-1080-56**
28	**Valve Seat**	**4**	**01-1120-01**	**01-1120-03**	**01-1120-03P**
29	**Valve Seat O-Ring**	**4**	*	*	**01-1200-56**
30	**Manifold O-Ring (Ø.987 x Ø.103)**	**4**	*	*	**01-1300-56**
31	Small Clamp Band Assy.	4	01-7100-03	01-7100-03	01-7100-03P
32	Small Clamp Band Bolt	8	01-6101-03	01-6101-03	01-6101-03
33	Small Clamp Band Nut (#10-24)	8	01-6400-03	01-6400-03	01-6400-03
34	Large Clamp Band Assy.	2	01-7300-03	01-7300-03	01-7300-03
35	Large Clamp Band Bolt (1/4"-20 x 2 1/4")	4	01-6070-03	01-6070-03	01-6070-03
36	Large Clamp Band Nut (1/4"-20)	4	04-6400-03	04-6400-03	04-6650-03-70
	Wing Nut (Not Shown)	4	N/A	N/A	04-6651-10

[1]Air Valve Assembly includes items 2 and 3.

*Refer to corresponding elastomer chart in Section 10.

070 Specialty Code = Saniflo[FDA]

All boldface items are primary wear parts.

P1 METAL | PTFE-FITTED | EXPLODED VIEW

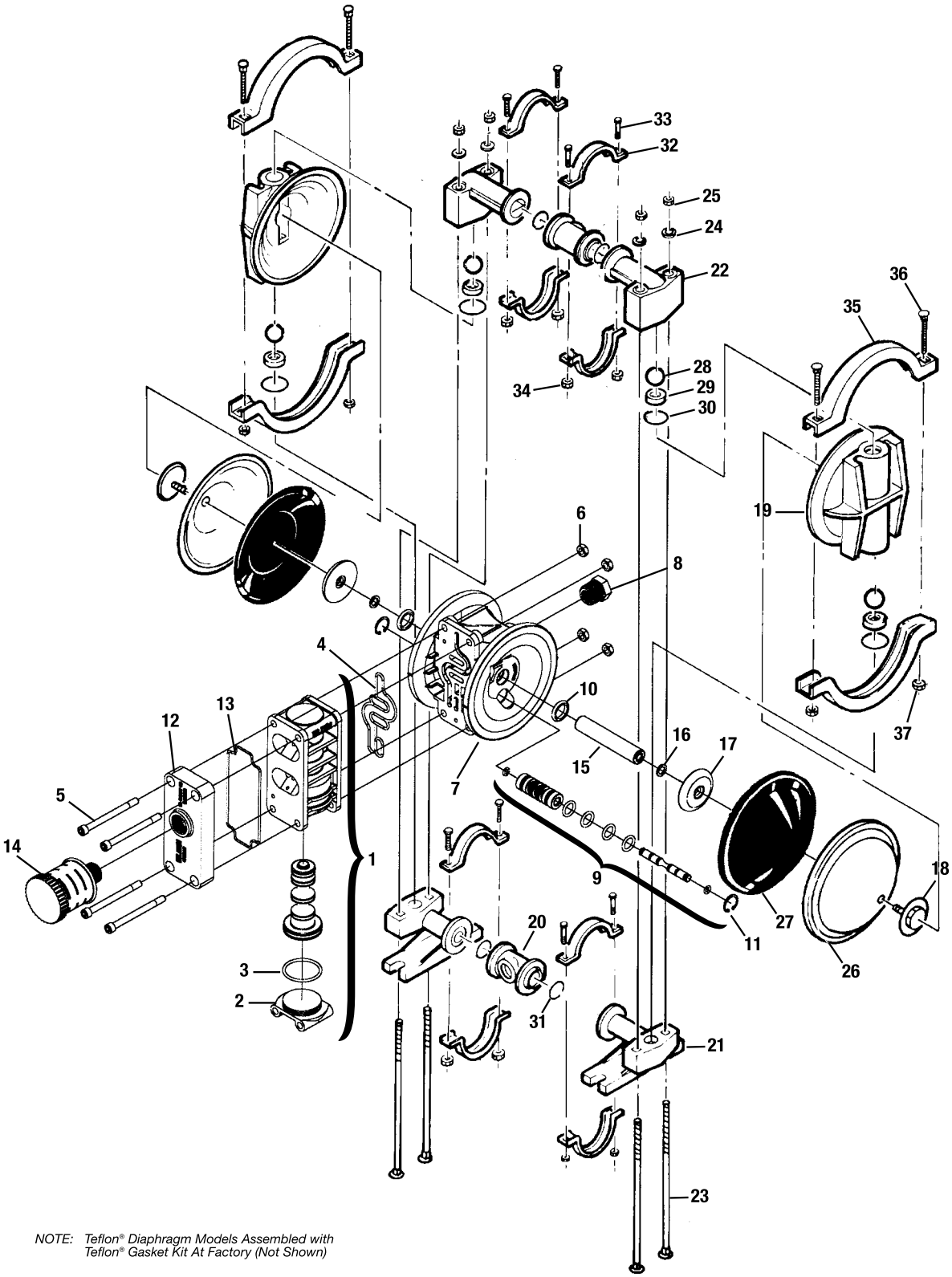

NOTE: Teflon® Diaphragm Models Assembled with Teflon® Gasket Kit At Factory (Not Shown)

P1 METAL PTFE-FITTED PARTS LISTING

Item	Part Description	Qty Per. Pump	P1/APPP P/N	P1/SPPP P/N	P1/SPPP/070 P/N
1	Pro-Flo™ Air Valve Assembly[1]	1	01-2010-20	01-2010-20	01-2010-20
2	End Cap	1	01-2332-20	01-2332-20	01-2332-20
3	O-Ring (-126) (Ø.1.362 x Ø.103), End Cap	1	01-2395-52	01-2395-52	01-2395-52
4	Gasket, Air Valve	1	01-2615-52	01-2615-52	01-2615-52
5	Screw, HSHC, Air Valve (1⁄4-20 x 3")	4	01-6001-03	01-6001-03	01-6001-03
6	Nut, Hex, (1/4"-20)	4	04-6400-03	04-6400-03	04-6400-03
7	Center Section Assembly	1	01-3140-20	01-3140-20	01-3140-20
8	Bushing, Reducer	1	01-6950-20	01-6950-20	01-6950-20
9	Removable Pilot Sleeve Assembly	1	01-3880-99	01-3880-99	01-3880-99
10	**Shaft Seal**	**2**	**01-3220-55**	**01-3220-55**	**01-3220-55**
11	Retaining Ring	2	00-2650-03	00-2650-03	00-2650-03
12	Muffler Plate	1	01-3181-20	01-3181-20	01-3181-20
13	Gasket, Muffler Plate	1	01-3505-52	01-3505-52	01-3505-52
14	Muffler	1	02-3510-99	02-3510-99	01-3510-99
15	Shaft, Pro-Flo™	1	01-3810-03	01-3810-03	01-3810-03
16	Disc Spring (Belleville Washer)	2	01-6802-08	01-6802-08	01-6802-08
17	Inner Piston	2	01-3711-08	01-3711-08	01-3711-08
18	Outer Piston	2	01-4570-01	01-4570-03	01-4570-03
19	Liquid Chamber	2	01-5000-01	01-5000-03	01-5000-03
20	Manifold Tee Section	2	01-5160-01	01-5160-03	01-5160-03-70
21	Inlet Manifold Elbow	2	01-5220-01	01-5220-03	01-5220-03
22	Discharge Manifold Elbow	2	01-5230-01	01-5230-03	01-5230-03
23	Screw, SHCS (Chamber Bolt) (1/4"-20 x 7 3/8)	4	01-6080-03	01-6080-03	01-6080-03
24	Vertical Bolt Washer (.2811.D. x .6250.D. x .065THR)	4	01-6730-03	01-6730-03	01-6730-03
25	Vertical Bolt Nut (1/4"-20)	4	04-6400-03	04-6400-03	04-6650-03-70
26	**PTFE Primary Diaphragm**	**2**	**01-1010-55**	**01-1010-55**	**01-1010-55**
27	**Neoprene Backup Diaphragm**	**2**	**01-1060-51**	**01-1060-51**	**01-1060-51**
28	**Valve Ball**	**4**	**01-1080-55**	**01-1080-55**	**01-1080-55**
29	**Valve Seat**	**4**	**01-1120-01**	**01-1120-03**	**01-1120-03P**
30	**Valve Seat (-119) O-Ring (Ø.924 x Ø.103)**	**4**	**01-1200-55**	**01-1200-55**	**01-1200-55**
31	**Manifold (-120) O-Ring (Ø.987 x Ø.103)**	**4**	**01-1300-55**	**01-1300-55**	**01-1300-55**
32	Small Clamp Band Assy.	4	01-7100-03	01-7100-03	01-7100-03
33	Small Clamp Band Bolt (#10-24 x 1")	8	01-6101-03	01-6101-03	01-6101-03
34	Small Clamp Band Nut (#10-24)	8	01-6400-03	01-6400-03	01-6400-03
35	Large Clamp Band Assy.	2	01-7300-03	01-7300-03	01-7300-03
36	Large Clamp Band Bolt (1/4"-20 x 2 1/4")	4	01-6070-03	01-6070-03	01-6070-03
37	Large Clamp Band Nut (1/4"-20)	4	04-6400-03	04-6400-03	04-6650-03-70
	Wing Nut	4	N/A	N/A	04-6651-10

[1]Air Valve Assembly includes items 2 and 3.

*Refer to corresponding elastomer chart in Section 10.

070 Specialty Code = Saniflo[FDA]

All boldface items are primary wear parts.

PX1 METAL

RUBBER-FITTED

EXPLODED VIEW

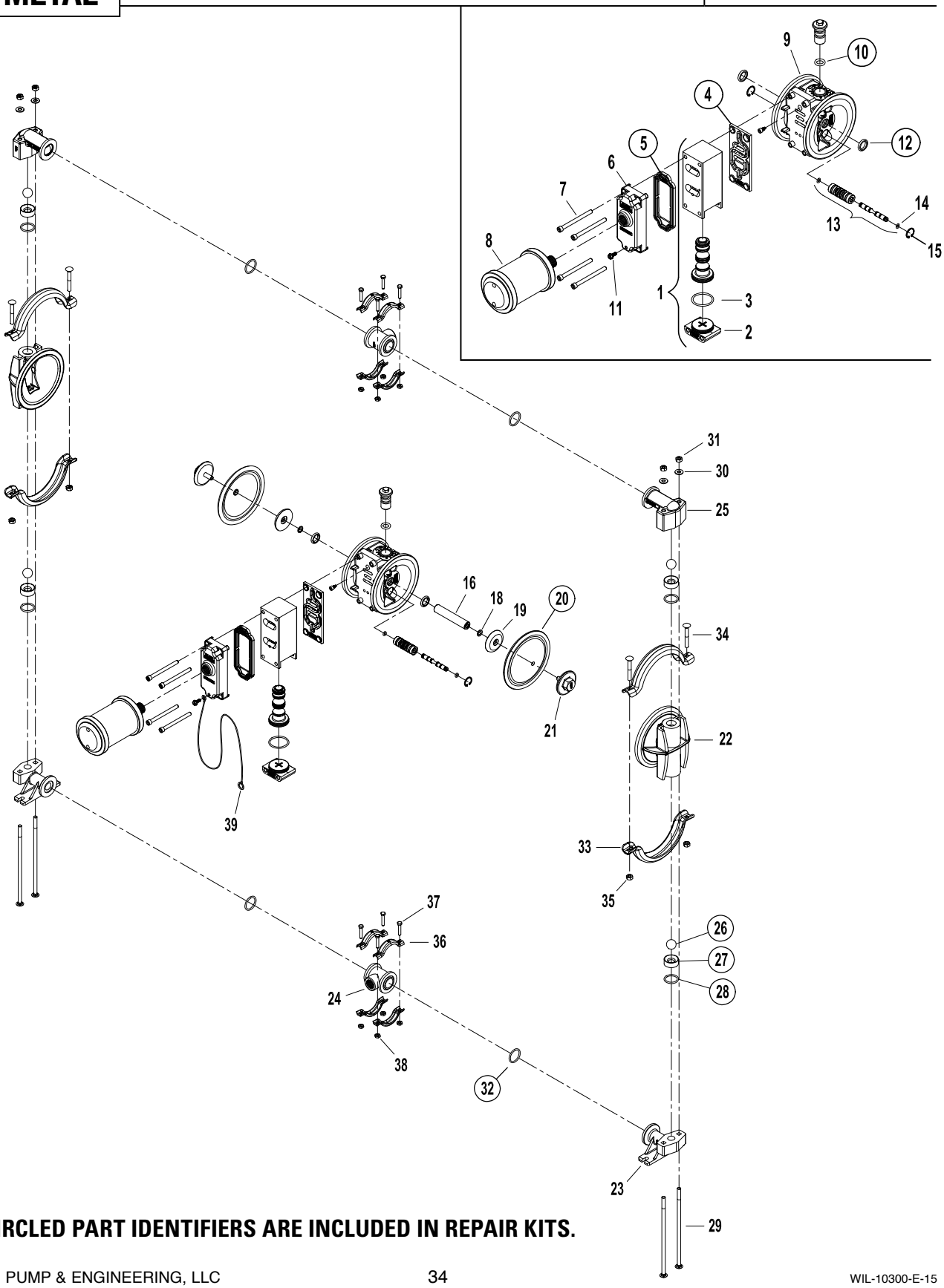

ALL CIRCLED PART IDENTIFIERS ARE INCLUDED IN REPAIR KITS.

PX1 METAL

RUBBER-FITTED PARTS LISTING

No.	Part Description	Qty	PX1/AAAAA P/N	PX1/SSAAA P/N	PX1/SSAAA/0070 P/N
1	**Pro-Flo X® Air Valve Assembly[1]**	**1**	**01-2030-01**	**01-2030-01**	**01-2030-01**
2	End Cap	1	01-2340-01	01-2340-01	01-2340-01
3	O-Ring (-126), End Cap (Ø1.362 x Ø.103)	1	01-2395-52	01-2395-52	01-2395-52
4	**Gasket, Air Valve, Pro-Flo X®**	**1**	**01-2620-52**	**01-2620-52**	**01-2620-52**
5	**Gasket, Muffler Plate, Pro-Flo X®**	**1**	**01-3502-52**	**01-3502-52**	**01-3502-52**
6	Muffler Plate, Pro-Flo X®	1	01-3185-01	01-3185-01	01-3185-01
7	Screw, SHC, Air Valve (1/4"-20 x 3")	4	01-6001-03	01-6001-03	01-6001-03
8	Muffler*	1	02-3512-99	02-3512-99	02-3512-99
9	Center Section Assembly, Pro-Flo X®[2]	1	01-3147-01	01-3147-01	01-3147-01
10	**O-Ring (-206), Air Adjustment Pin (Ø.484 x Ø.139)**	**1**	**00-1300-52**	**00-1300-52**	**00-1300-52**
11	Screw, 10-32 x .50 Self-Tapping Grounding	1	04-6345-08	04-6345-08	04-6345-08
12	**Shaft Seal**	**2**	**01-3220-55**	**01-3220-55**	**01-3220-55**
13	**Pilot Sleeve Assembly**	**1**	**01-3880-99**	**01-3880-99**	**01-3880-99**
14	**Pilot Spool Retaining O-Ring**	**2**	**04-2650-49-700**	**04-2650-49-700**	**04-2650-49-700**
15	Retaining Ring	1	00-2650-03	00-2650-03	00-2650-03
16	Shaft	1	01-3810-03	01-3810-03	01-3810-03
17	Stud, 5/16"-18 x 1 3/8" (not shown)	2	N/A	N/A	01-6150-03
18	Disc Spring	2	01-6802-08	01-6802-08	01-6802-08
19	Inner Piston	2	01-3711-08	01-3711-08	01-3711-08
20	**Diaphragm**	**2**	*****	*****	**01-1010-56**
21	Outer Piston	1	01-4570-01	01-4570-03	01-4570-03P
22	Liquid Chamber	2	01-5000-01	01-5000-03	01-5000-03P
23	Inlet Manifold Elbow	2	01-5220-01	01-5220-03	01-5220-03P
24	Manifold Tee Section	2	01-5160-01	01-5160-03	01-5160-03-70P
25	Discharge Manifold Elbow	2	01-5230-01	01-5230-03	01-5230-03P
26	**Ball, Valve**	**4**	*****	*****	**01-1080-56**
27	**Seat, Valve**	**4**	**01-1120-01**	**01-1120-03**	**01-1120-03P**
28	**Valve Seat (-119) O-Ring (Ø.924 x Ø.103)**	**4**	*****	*****	**01-1200-56**
29	Bolt, Carriage (1/4"-20 x 7-3/8")	4	01-6080-03	01-6080-03	01-6080-03
30	Washer (1/4")	4	01-6730-03	01-6730-03	01-6730-03
31	Hex Nut (1/4"-20)	4	04-6400-03	04-6400-03	04-6651-10
32	**O-Ring (-120), Manifold (Ø.987 x Ø.103)**	**4**	*****	*****	**01-1300-56**
33	Large Clamp Band	4	01-7300-03	01-7300-03	01-7300-03
34	Bolt, Carriage (1/4"-20 x 2 1/4")	4	01-6070-03	01-6070-03	01-6070-03
35	Hex Nut (1/4"-20)	4	04-6400-03	04-6400-03	N/A
36	Small Clamp Band	8	01-7100-03	01-7100-03	01-7100-03
37	Screw, HHC (#10-24 x 1")	8	01-6101-03	01-6101-03	01-6101-03
38	Hex Nut (#10-24)	8	01-6400-03	01-6400-03	01-6400-03
39	Grounding Strap, CSA[3]	1	01-8303-99	01-8303-99	N/A
	Wing Nut (not shown)	4	N/A	N/A	04-6651-10

[1]Air Valve Assembly includeds item numbers 2 and 3.
[2]Center Section Assembly includes items 6, 10 and 12.
[3]CSA pumps to use grounding strap.
For submersible Pro-Flo X™ pump, use air valve gasket 01-2621-52 and pipe plug 00-7010-08 or 00-7010-03.
0070 Specialty Code = Saniflo[FDAv]
All boldface items are primary wear items

*NOTE: Muffler should not be used with Canadian Standards Association (CSA) pumps. The gas outlet of CSA configured pumps must be vented to a safe location in accordance with local or, in the Absence of local codes, an industry or nationally recognized code having jurisdiction over the specified installation.

PX1 METAL

PTFE-FITTED

EXPLODED VIEW

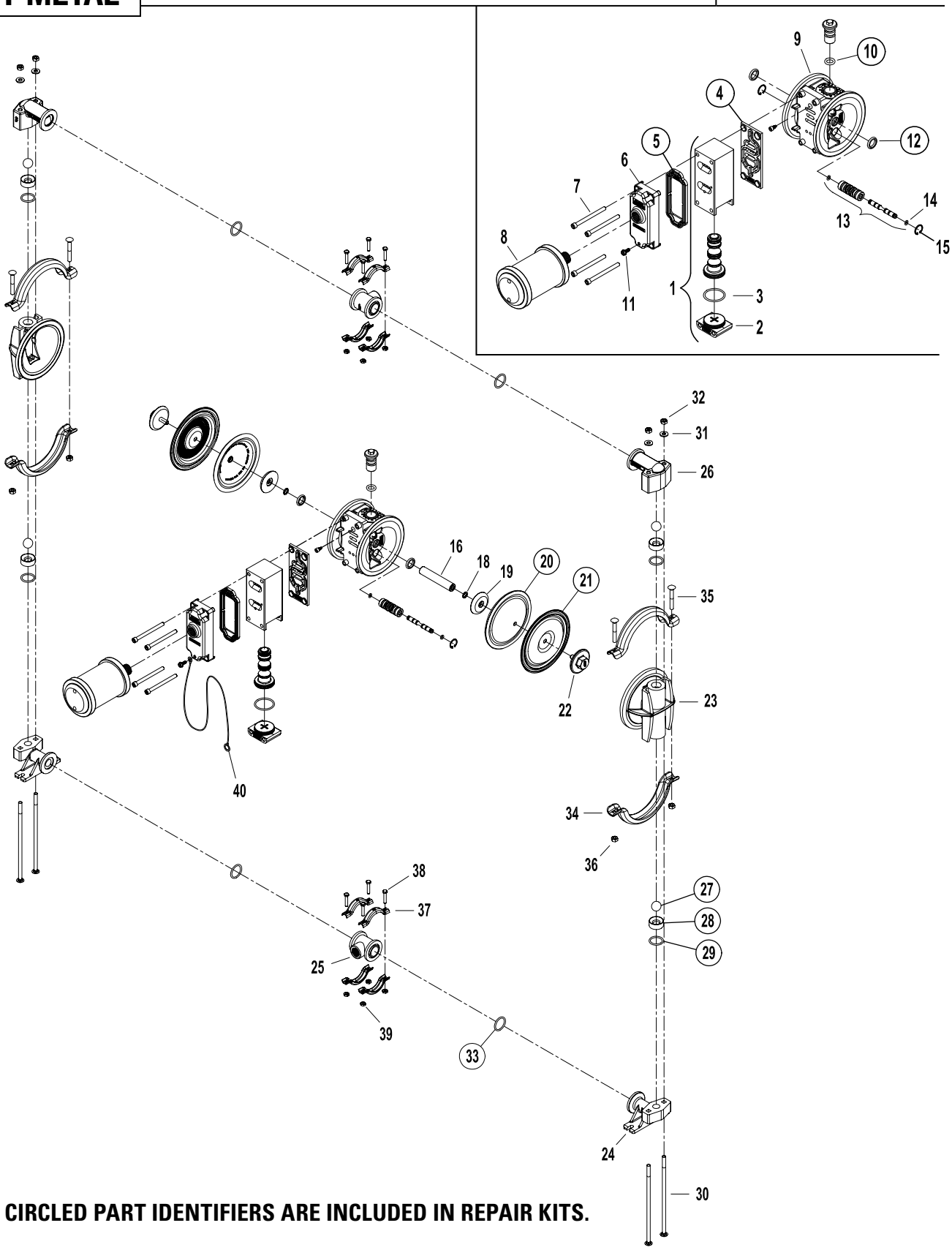

ALL CIRCLED PART IDENTIFIERS ARE INCLUDED IN REPAIR KITS.

PX1 METAL

PTFE-FITTED

PARTS LISTING

No.	Part Description	Qty	PX1/AAAAA P/N	PX1/SSAAA P/N	PX1/SSAAA/0070 P/N
1	**Pro-Flo X® Air Valve Assembly[1]**	**1**	**01-2030-01**	**01-2030-01**	**01-2030-01**
2	End Cap	1	01-2340-01	01-2340-01	01-2340-01
3	O-Ring (-126), End Cap (Ø1.362 x Ø.103)	1	01-2395-52	01-2395-52	01-2395-52
4	**Gasket, Air Valve, Pro-Flo X®**	**1**	**01-2620-52**	**01-2620-52**	**01-2620-52**
5	**Gasket, Muffler Plate, Pro-Flo X®**	**1**	**01-3502-52**	**01-3502-52**	**01-3502-52**
6	Muffler Plate, Pro-Flo X®	1	01-3185-01	01-3185-01	01-3185-01
7	Screw, SHC, Air Valve (1/4"-20 x 3")	4	01-6001-03	01-6001-03	01-6001-03
8	Muffler*	1	02-3512-99	02-3512-99	02-3512-99
9	Center Section Assembly, Pro-Flo X® [2]	1	01-3147-01	01-3147-01	01-3147-01
10	**O-Ring (-206), Air Adjustment Pin (Ø.484 x Ø.139)**	**1**	**00-1300-52**	**00-1300-52**	**00-1300-52**
11	Screw, 10-32 x .50 Self-Tapping Grounding	1	04-6345-08	04-6345-08	04-6345-08
12	**Shaft Seal**	**2**	**01-3220-55**	**01-3220-55**	**01-3220-55**
13	**Pilot Sleeve Assembly**	**1**	**01-3880-99**	**01-3880-99**	**01-3880-99**
14	**Pilot Spool Retaining O-Ring**	**2**	**04-2650-49-700**	**04-2650-49-700**	**04-2650-49-700**
15	Retaining Ring	1	00-2650-03	00-2650-03	00-2650-03
16	Shaft	1	01-3810-03	01-3810-03	01-3810-03
17	Stud, 5/16" x 18 x 1 3/8" (not shown)	2	N/A	N/A	01-6150-03
18	Disc Spring	2	01-6802-08	01-6802-08	01-6802-08
19	Inner Piston	2	01-3711-08	01-3711-08	01-3711-08
20	**Diaphragm, Backup**	**2**	**01-1060-51**	**01-1060-51**	**01-1060-51**
21	**Diaphragm, Primary**	**2**	**01-1010-55**	**01-1010-55**	**01-1010-55**
22	Outer Piston	1	01-4570-01	01-4570-03	01-4570-03P
23	Liquid Chamber	2	01-5000-01	01-5000-03	01-5000-03P
24	Inlet Manifold Elbow	2	01-5220-01	01-5220-03	01-5220-03P
25	Manifold Tee Section	2	01-5160-01	01-5160-03	01-5160-03-70P
26	Discharge Manifold Elbow	2	01-5230-01	01-5230-03	01-5230-03P
27	**Ball, Valve**	**4**	**01-1080-56**	**01-1080-56**	**01-1080-56**
28	**Seat, Valve**	**4**	**01-1120-01**	**01-1120-03**	**01-1120-03P**
29	**Valve Seat (-119) O-Ring (Ø.924 x Ø.103)**	**4**	**01-1200-55**	**01-1200-55**	**01-1200-55**
30	Bolt, Carriage (1/4"-20 x 7-3/8")	4	01-6080-03	01-6080-03	01-6080-03
31	Washer (1/4")	4	01-6730-03	01-6730-03	01-6730-03
32	Hex Nut (1/4"-20)	4	04-6400-03	04-6400-03	04-6651-10
33	**O-Ring (-120), Manifold (Ø.987 x Ø.103)**	**4**	**01-1300-55**	**01-1300-55**	**01-1300-55**
34	Large Clamp Band	4	01-7300-03	01-7300-03	01-7300-03
35	Bolt, Carriage (1/4"-20 x 2 1/4")	4	01-6070-03	01-6070-03	01-6070-03
36	Hex Nut (1/4"-20)	4	04-6400-03	04-6400-03	N/A
37	Small Clamp Band	8	01-7100-03	01-7100-03	01-7100-03
38	Screw, HHC (#10-24 x 1")	8	01-6101-03	01-6101-03	01-6101-03
39	Hex Nut (#10-24)	8	01-6400-03	01-6400-03	01-6400-03
40	Grounding Stap, CSA[3]	1	01-8303-99	01-8303-99	N/A
	Wing Nut (not shown)	4	N/A	N/A	04-6651-10

[1]Air Valve Assembly includeds item numbers 2 and 3.
[2]Center Section Assembly includes items 6, 10 and 12.
[3]CSA pumps to use grounding strap.
For submersible Pro-Flo X™ pump, use air valve gasket 01-2621-52 and pipe plug 00-7010-08 or 00-7010-03.
0070 Specialty Code = SanifloFDA
All boldface items are primary wear items

*NOTE: Muffler should not be used with Canadian Standards Association (CSA) pumps. The gas outlet of CSA configured pumps must be vented to a safe location in accordance with local or, in the Absence of local codes, an industry or nationally recognized code having jurisdiction over the specified installation.

P1 & PX1 Metal Pumps

MATERIAL	Diaphragm P/N	VALVE BALL P/N	VALVE SEAT O-RING P/N	MANIFOLD O-RING P/N
Polyurethane	01-1010-50	01-1080-50	01-1200-50	01-1300-50
Buna-N	01-1010-52	01-1080-52	00-1260-52	01-1300-52
Viton®	01-1010-53	01-1080-53	N/A	N/A
Wil-Flex™	01-1010-58	01-1080-58	00-1260-58	00-1260-58
Saniflex™	01-1010-56	01-1080-56	01-1200-56	01-1300-56
PTFE**	01-1010-55	01-1080-55	01-1200-55	01-1300-55
EPDM	01-1010-54	01-1080-54	00-1260-54	01-1300-54

**NOTE: An integral piston PTFE diaphragm is also available. To order this diaphragm, use part number 01-1030-55. When using this diaphragm, no inner pistons are needed. The inner piston is integrated into the diaphragm design.